dimensions

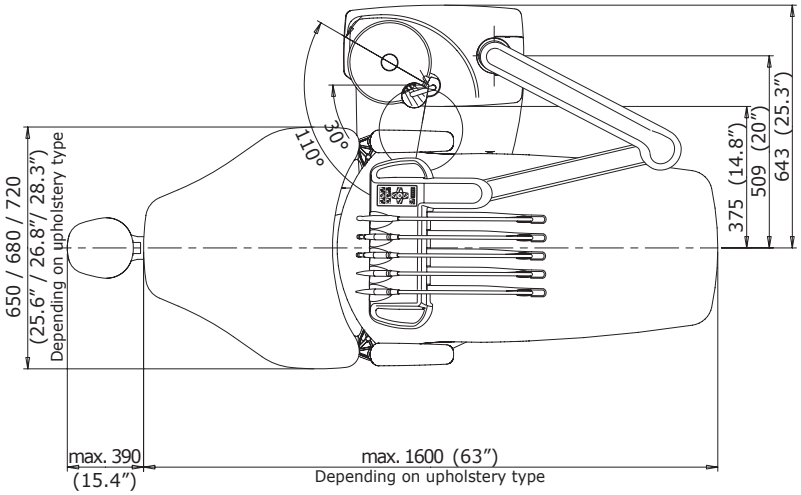

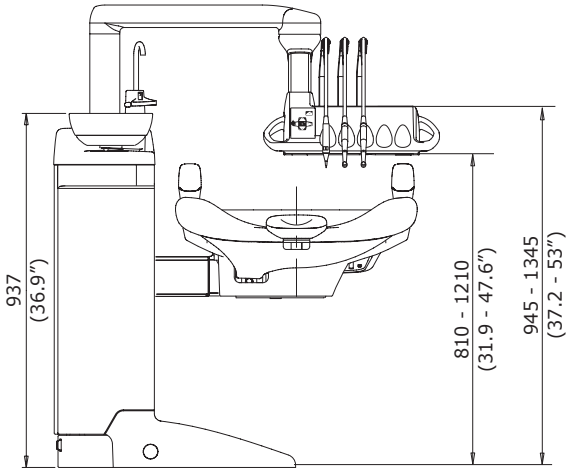

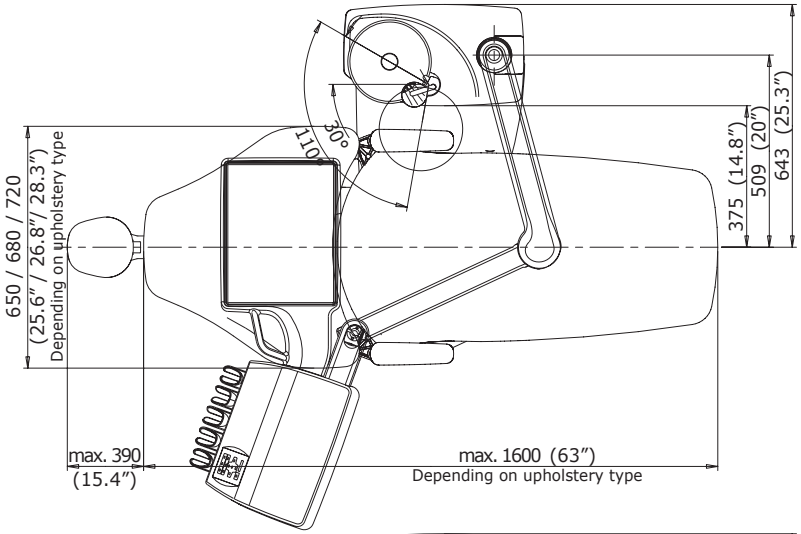

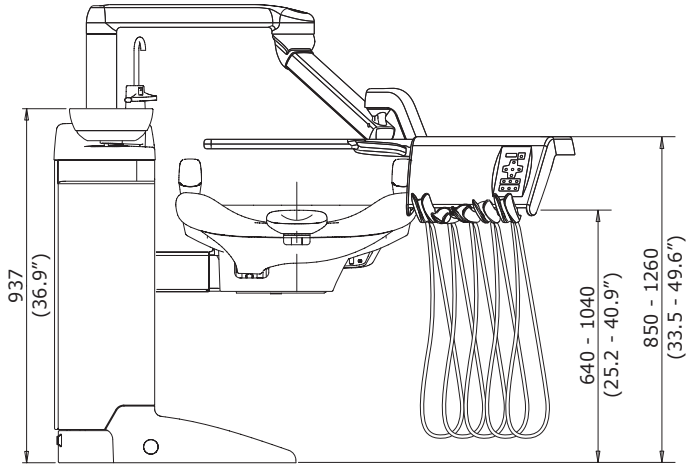

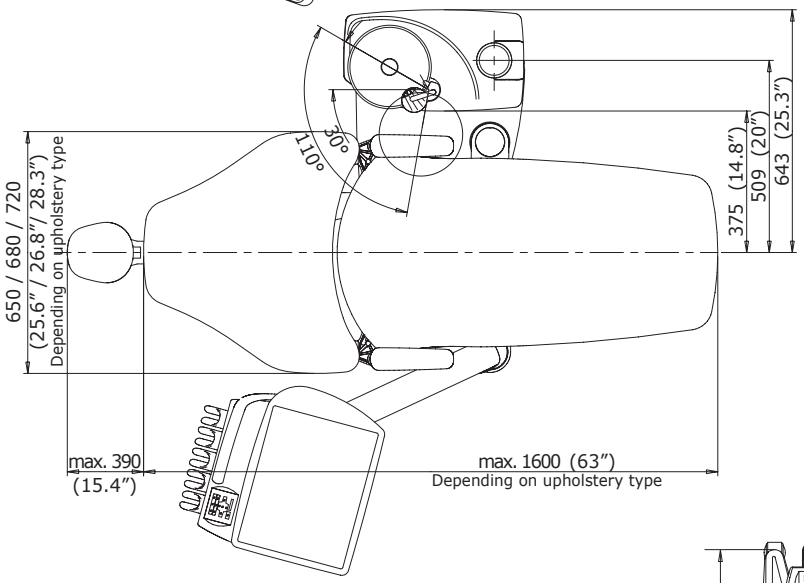

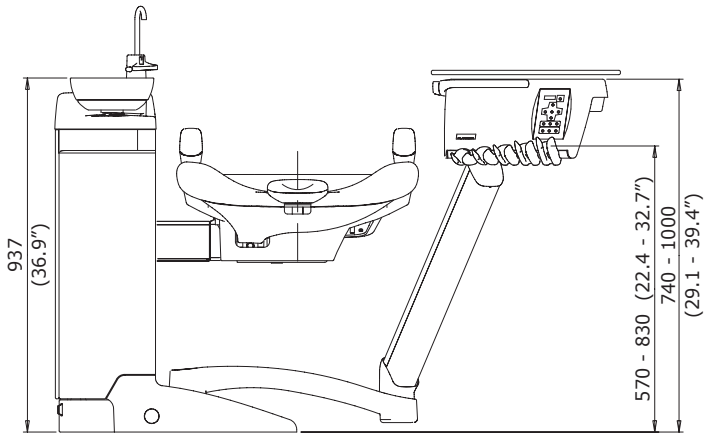

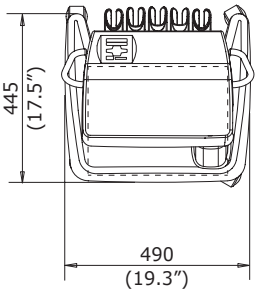

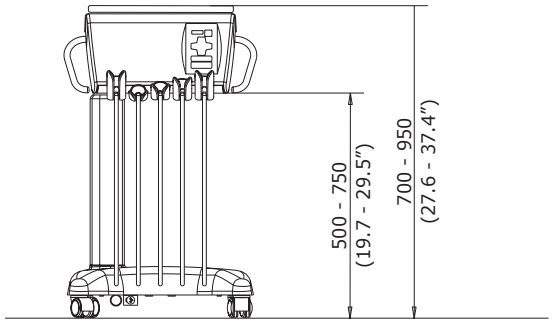

PLANMECA
compact